Alrouf LED
TX-MA-01 (L)
Solar Power
Medium intensity Type A
Aviation Obstruction Light

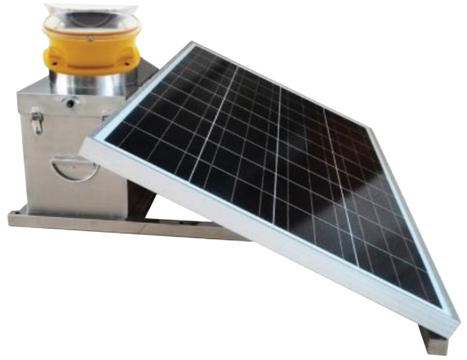

SOLAR POWER

Products Description

Type B Medium-intensity Solar Power

Type B Medium-intensity Solar Power Aviation Obstruction Dual Light, its shell adopt

high intensity casting aviation aluminum, Light source adopt high efficient SMT LED chip and combine with reflecting optical structure, which have the specific of high brightness and long lifespan; Management circuit with Strong lightning protection and With the surge protection device, which can adopt to extremely bad working environment. Built-in advanced battery management protection module, which can prolong the battery lifespan Effectively Built-in dual light source design, when the main light source failure, it will switch to the standby light source automatically

Features

- Housing adopt high intensity casting aviation aluminum.
- Adopt with independent research and development advanced optical lighting system. Spotlight angle meets CAAC and ICAO requirements.
- With surge protection device, which can adopt to extremely bad working environment.
- Adopt high conversion efficiency monocry stalline silicon chip, its service life is more than 20 years
- With the impact resistance, anti lightning, resistant to sunlight, anti snow, can resist typhoons, hail and other severe weather.
- Built-in independent battery charge and discharge management module, easy maintenance.
- It can be customized functions of GPS Beidou wireless synchronization, LORA-10KM wireless sync, Remote control and telemetering.
- Integrated high-power solar panel design, high charging efficiency.

Dimension

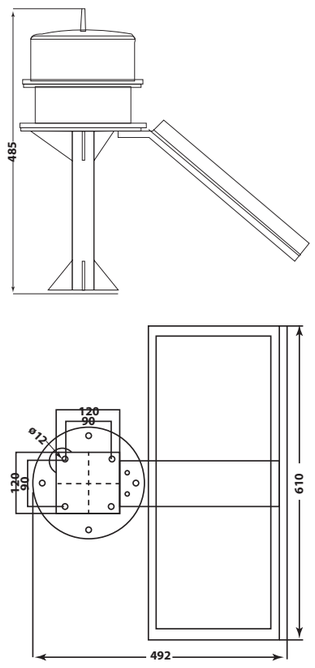

Specification

Performed Standard	CAAC	MH/T 6012-2015 and AC-137-CA-2017	Aviation obstruction light
	ICAO	ICAO Annex 14 Volume I The 8th Edition	Airport design and operation
	FAA	Advisory Circular 150/5345-43J	Specification for Obstruction Lighting Equipment

Model	ART-MAS-01 (SINGLE)	Vertical Divergence	3°
Power supply	Solar power supply	Horizontal Out-put	360
Power frequency	DC supply	Overall Size	610×492×485mm
Average power	≤2.5W	Installation size	Φ90mm*4*M8
Solar panel power	35W	Battery power	192WH
Working mode	Flash 20 times/min	Ambient Temperature	-40℃～+55℃
Emitted color	Red		
Light source	LED	Weight	≈7.4kg
Shell material	Aviation dedicated Aluminum alloy	Wind load	240km/h
		Luminous mirror material	optical PC
Light source lifespan	≥200000h		
Surge Protection Grade	-	Protection grade	IP65
Get wet in the rain	Can be exposed to rain in any wind direction	Relative humidity	0%～95%
		Salt spray	Can be exposed to salt spray
Radiation	Can be exposed to solar radiation	Leakage current	/
Seismic resistance	10～500Hz,2G10min/cycle, XYZ 60 minutes for each axis	EMC standards	Emitted:EN55022(CISPR22) class A harmonic wave: EN61000-3-2,-3
		Altitude	≥5500m
Mean Time Between Failure	≥200000h, MIL-HDBK-217F(25℃)	Effective intensity	Night :2000cd（±25%）
		Photocell stage	50/100Lux

Application

Block,, Airport, High-Pole Lamp, Chimney, Bridge, Towers, Communication Tower, Super High Building